Current part is item (3) on diagram. Available at www.oshkoshequipment.com

(1) GROUP (a) FIG. NO.	(2) (b) ITEM NO.	(3) SMR CODE	NATIONAL STOCK NUMBER	(4) PART NUMBER	(5) FSCM	(6) DESCRIPTION USABLE ON CODE	(7) U/M	(8) QTY INC IN UNIT
						2202-ACCESSORY ITEMS		
320	1	PAOZZ	5310-00-705-8965	7058965	19207	NUT, PLAIN, CAP: CLAMPING, WIND-SHIELD WIPER ARM TO MINOR	EA	2
320	2	PAOZZ	2540-00-050-0810	MS53049-1	96906	ARM, WINDSHIELD WIPER: ADJ, 7-1/2 CLOSED, 12 EXTENDED	EA	2
320	3	PAOZZ	2540-00-255-9212	MS53048-10	96906	BLADE, WINDSHIELD WIPER: 10 IN LG	EA	2
320	4	PAOZZ	5305-00-855-0957	MS24629-46	96906	SCREW, TAPPING, THREAD FORMING	EA	4
320	5	PAOZZ	5340-00-984-8540	MS21333-102	96906	CLAMP, ELECTRICAL	EA	1
320	6	PAOZZ	5340-00-057-2890	MS21333-3	96906	CLAMP, LOOP	EA	3
320	7	PAOZZ	4730-00-727-9627	7279627	19207	CLAMP, HOSE: WINDSHIELD WIPER HOSE CONNECTIONS	EA	8
320	8	MOOZZ		7331422	19207	HOSE, RUBBER: WINDSHIELD WIPER (1 PIECE 15-1/2 IN. LG, 1 PIECE 7 IN. LG. 1 PIECE 2 IN. 1 PIECE 34 IN. LG) (58-1/2 IN. REQUIRED TOTAL) MFD FROM HOSE, 4720-00-203-2668)	EA	1
320	9	PAOZZ	4730-00-737-2701	7372701	19207	TEE, HOSE: WINDSHIELD WIPER MOTOR LINE	EA	1
320	10	MOOZZ		8689206	19207	TUBE, COPPER: SEAMLESS, COLD-DRAWN SOFT ANLD, 1/4 OD, 0.035 WALL THK, 17-1/2 IN LG. (MFD FROM TUBE, 4710-00-277-5525)	EA	1
320	11	PAOZZ	5305-00-165-8252	7372704	19207	SCREW, ASSEMBLED WASHER	EA	4
320	12	PAOZZ	2540-00-391-4322	MS53017-1	96906	MOTOR, WINDSHIELD	EA	2
321	1	PAOZZ	2540-00-003-8346	11644865	19207	RESERVOIR: WINDSHIELD WASHER ASSY AC	EA	1
321	2	XBOZZ	2540-00-295-7875	11676884	19207	PLATE: WINDSHIELD WASHER, RESERVOIR TO STEERING COLUMN AC	EA	1
321	3	PAOZZ	2540-00-264-8812	11640666	19207	STRAINER: WINDSHIELD WASHER RESERVOIR, LEKTOMESH SCREEN AC	EA	1
321	4	MOOZZ		11639682-3	19207	HOSE, RUBBER: WINDSHIELD WASHER, 39 IN. L.472 OD, .236 ID (MFD FROM TUBING, 4720-00-182-9121) AC	EA	1
321	5	PAOZZ	5325-00-276-6100	MS35489-14	96906	GROMMET, RUBBER: DASH PANEL AC	EA	1
321	6	PAOZZ		11676885	19207	TEE, CONNECTOR: WINDSHIELD WASHER, PLASTIC POLYAMIDE, 1.62 ACROSS, 2.50 OD, 3 PLACES AC	EA	1
321	7	MOOZZ		11639682-2	19207	HOSE, RUBBER: WINDSHIELD WASHER, 3 IN. L,.472 OD, 2.36 ID (MFD FROM TUBING, 4720-00-182-9121) AC	EA	1
321	8	PAOZZ	2540-00-397-3315	11676888	19207	VALVE ASSEMBLY: WINDSHIELD WASHER AC	EA	1
321	9	MOOZZ		11644861-2	19207	HOSE RUBBER: WINDSHIELD WASHER, 9 IN. L,.302 OD,.176 ID(MFD FROM TUBING, 4720-00-356-8351) AC	EA	1

Current part is item (3) on diagram. Available at www.oshkoshequipment.com

Current part is item (3) on diagram. Available at www.oshkoshequipment.com

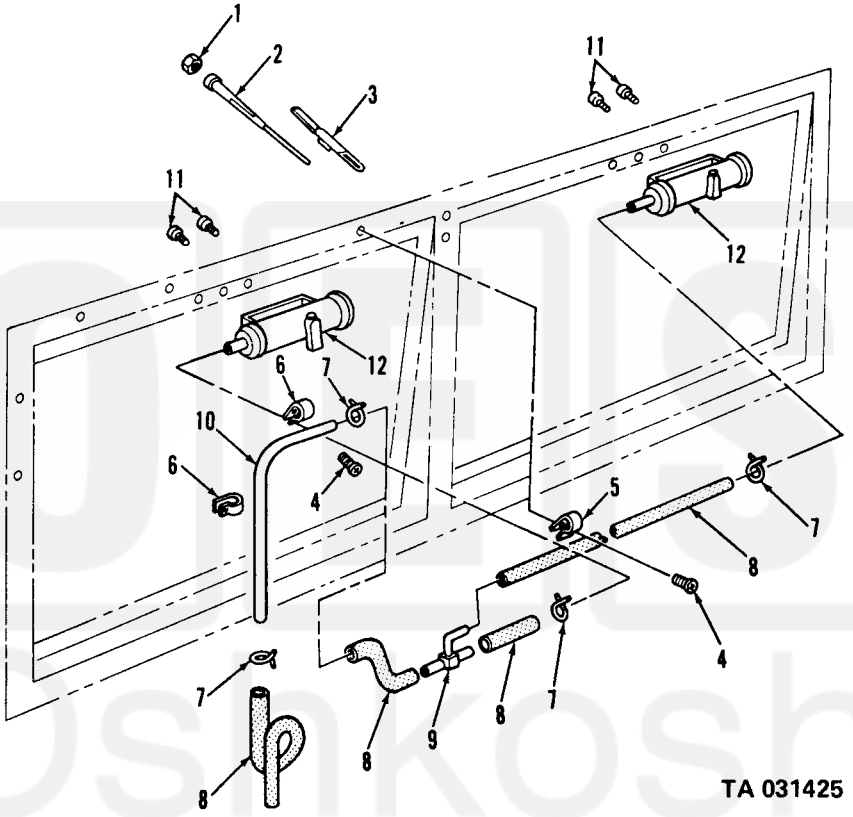

Figure 320. Windshield wipers, motors.

Current part is item (3) on diagram. Available at www.oshkoshequipment.com